Cambridge International AS & A Level

Cambridge Assessment International Education
Cambridge International Advanced Subsidiary and Advanced Level

CANDIDATE NAME

CENTRE NUMBER

CANDIDATE NUMBER

9290265852

PHYSICS **9702/33**

Paper 3 Advanced Practical Skills 1 **October/November 2019**

2 hours

Candidates answer on the Question Paper.

Additional Materials: As listed in the Confidential Instructions.

READ THESE INSTRUCTIONS FIRST

Write your centre number, candidate number and name on all the work you hand in.
Write in dark blue or black pen.
You may use an HB pencil for any diagrams or graphs.
Do not use staples, paper clips, glue or correction fluid.
DO **NOT** WRITE IN ANY BARCODES.

Answer **both** questions.
You will be allowed to work with the apparatus for a maximum of one hour for each question.
You are expected to record all your observations as soon as these observations are made, and to plan the presentation of the records so that it is not necessary to make a fair copy of them.
You are reminded of the need for good English and clear presentation in your answers.

Electronic calculators may be used.
You may lose marks if you do not show your working or if you do not use appropriate units.

Additional answer paper and graph paper should be used only if it becomes necessary to do so.

At the end of the examination, fasten all your work securely together.
The number of marks is given in brackets [ ] at the end of each question or part question.

For Examiner's Use	
1	
2	
Total	

This document consists of **10** printed pages and **2** blank pages.

© UCLES 2019

Cambridge Assessment International Education

PapaCambridge

BLANK PAGE

© UCLES 2019

PapaCambridge

You may not need to use all of the materials provided.

1 In this experiment, you will investigate the equilibrium of a metre rule.

(a) You have been provided with a metre rule with a 100 g mass attached to it.

- Set up the apparatus as shown in Fig. 1.1.

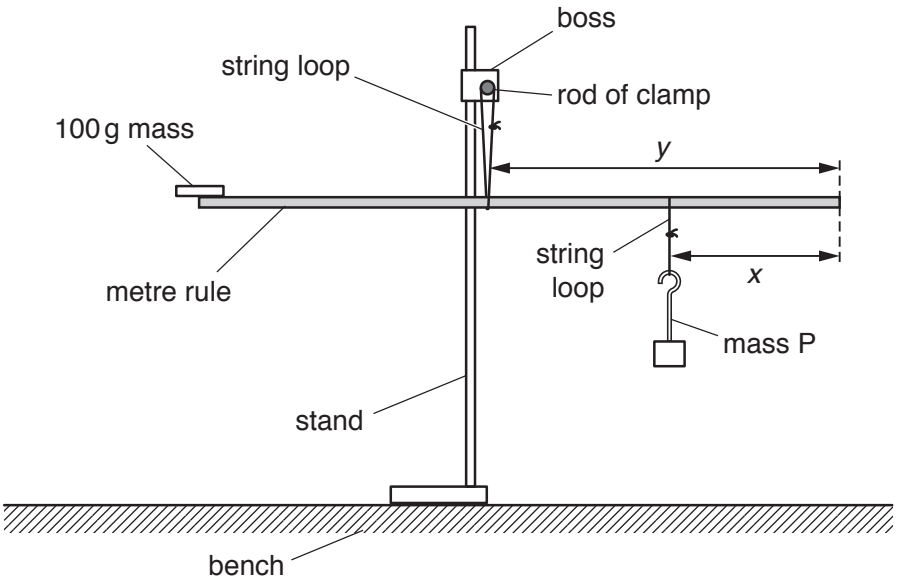

Fig. 1.1

The distance between the end of the rule and the string loop from which mass P is suspended is *x*, as shown in Fig. 1.1.

The distance between the same end of the rule and the string loop suspended from the rod of the clamp is *y*.

- Position mass P so that *x* is approximately 30 cm.
- Without changing *x*, adjust the position of the rule until it balances.
- Measure and record *x* and *y*.

x = ...

y = ...
[2]

PapaCambridge

(b) Change x. Adjust the position of the rule until it balances. Measure and record x and y.

Repeat until you have six sets of values.

Record your results in a table.

[8]

(c) **(i)** Plot a graph of y on the y-axis against x on the x-axis. [3]

(ii) Draw the straight line of best fit. [1]

(iii) Determine the gradient and y-intercept of this line.

gradient = ...

y-intercept = ...
[2]

© UCLES 2019

PapaCambridge

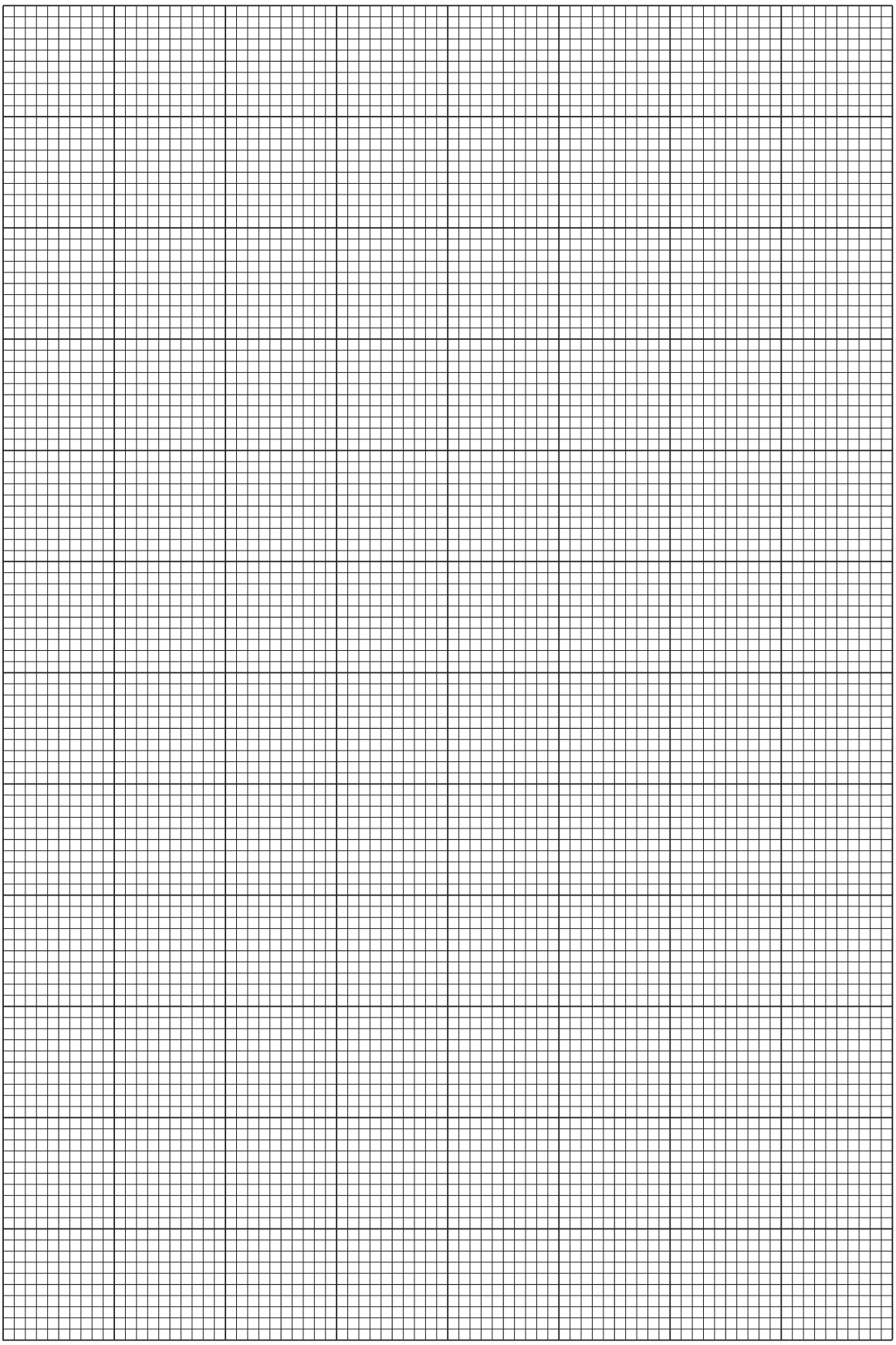

© UCLES 2019

[Turn over

PapaCambridge

(d) It is suggested that the quantities y and x are related by the equation

$$y = Ax + B$$

where A and B are constants.

Using your answers in **(c)(iii)**, determine the values of A and B.
Give appropriate units.

$A =$ .....

$B =$ .....
[2]

(e) Theory suggests that

$$A = \frac{2M}{3M + Q}$$

where M is the mass of the metre rule and $Q = 0.100\,\text{kg}$.

Determine a value for M.
Give your answer to three significant figures. Include an appropriate unit.

$M =$ ..... [2]

[Total: 20]

© UCLES 2019

PapaCambridge

BLANK PAGE

PapaCambridge

You may not need to use all of the materials provided.

2 In this experiment, you will investigate the motion of a magnet connected to some springs.

(a) (i) You have been provided with two magnets A and B and three connected springs.

- Use the tape to attach magnet A to the springs as shown in Fig. 2.1.

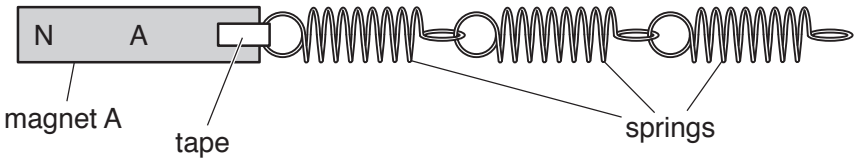

Fig. 2.1

- Set up the apparatus as shown in Fig. 2.2, with the N poles of magnets A and B facing each other.

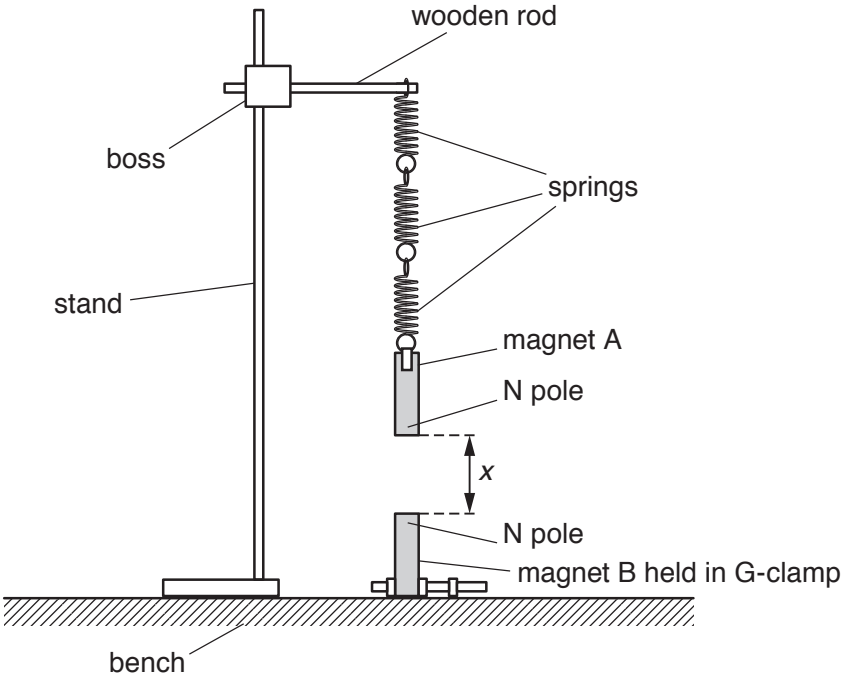

Fig. 2.2

- The distance between the magnets is *x*.

  Adjust the height of the wooden rod until *x* is approximately 7 cm.

- Measure and record *x*.

x = ... [1]

© UCLES 2019

PapaCambridge

(ii) Estimate the percentage uncertainty in your value of x.

percentage uncertainty = ... [1]

(b) (i)
- Pull magnet A down through a short distance.
- Release the magnet. The magnet will oscillate.
- Determine the period T_1 of these oscillations.

T_1 = ... s [2]

(ii)
- Reverse magnet B in the G-clamp so that its S pole is at the top.
- Adjust the position of the wooden rod until x has the same value as in **(a)(i)**.
- Determine the period T_2 of the oscillations of magnet A.

T_2 = ... s [1]

(iii) Calculate $T_2 - T_1$.

$T_2 - T_1$ = ... s [1]

© UCLES 2019

[Turn over

PapaCambridge

(c)
- Reverse magnet B so that its N pole is at the top.
- Adjust the position of the wooden rod until x is approximately 10 cm.
- Measure and record x.

x = ...

- Repeat **(b)** using this value of x.

T_1 = ... s

T_2 = ... s

$T_2 - T_1$ = ... s
[3]

(d) It is suggested that the relationship between T_1, T_2 and x is

$$T_2 - T_1 = \frac{k}{x^3}$$

where k is a constant.

(i) Using your data, calculate two values of k.

first value of k = ...

second value of k = ...
[1]

© UCLES 2019

PapaCambridge

(ii) Justify the number of significant figures that you have given for your values of *k*.

.....

.....

..... [1]

(iii) Explain whether your results in **(d)(i)** support the suggested relationship.

.....

.....

.....

..... [1]

PapaCambridge

(e) (i) Describe four sources of uncertainty or limitations of the procedure for this experiment.

1. .....

.....

2. .....

.....

3. .....

.....

4. .....

.....

[4]

(ii) Describe four improvements that could be made to this experiment. You may suggest the use of other apparatus or different procedures.

1. .....

.....

2. .....

.....

3. .....

.....

4. .....

.....

[4]

[Total: 20]

Permission to reproduce items where third-party owned material protected by copyright is included has been sought and cleared where possible. Every reasonable effort has been made by the publisher (UCLES) to trace copyright holders, but if any items requiring clearance have unwittingly been included, the publisher will be pleased to make amends at the earliest possible opportunity.

To avoid the issue of disclosure of answer-related information to candidates, all copyright acknowledgements are reproduced online in the Cambridge Assessment International Education Copyright Acknowledgements Booklet. This is produced for each series of examinations and is freely available to download at www.cambridgeinternational.org after the live examination series.

Cambridge Assessment International Education is part of the Cambridge Assessment Group. Cambridge Assessment is the brand name of the University of Cambridge Local Examinations Syndicate (UCLES), which itself is a department of the University of Cambridge.

PapaCambridge